PHILIPS

Lighting



MASTER LED spot ExpertColor AR111

G A↑G

MAS LEDExpertColor 20-100W 927 AR111 45D

MASTER, LEDspot, AR111, 100 W, G53, 2700 K, 1270 lm, CRI 95, 40000 hour(s)

MASTER, LEDspot, AR111, 100 W, G53, 2700 K, 1270 lm, CRI 95, 40000 hour(s), 63 lm/W, EEL G, PF 0.7, Beam angle 45 degree(s), RG1, IP20, SVM 1.5, PstLM 1

Product data

General Information	
Cap-Base	G53
Nominal lifetime	40,000 hour(s)
Switching Cycle	50,000
Lighting Technology	LEDspot
Flux measurement reference	Narrow Cone
Warranty period	5 years

Light Technical	
Color Code	927 [CCT of 2700K]
Beam Angle (Nom)	45 degree(s)
Luminous Flux	1,270 lm
Luminous Intensity (Nom)	2,100 cd
Color Designation	Warm White (WW)
Correlated Color Temperature (Nom)	2700 K
Luminous Efficacy (rated) (Nom)	63 lm/W
Color Consistency	<4
Color rendering index (CRI)	95
LLMF At End Of Nominal Lifetime (Nom)	70 %
Luminous Flux in 90° Cone (Rated)	1,270 lm
Photobiological safety according to EN 62471	RG1

Operating and Electrical	
Line Frequency	50 to 60 Hz
Input Frequency	50 to 60 Hz
Power Consumption	20 W
Lamp Current (Nom)	2,000 mA
Wattage Equivalent	100 W
Starting Time (Nom)	0.5 s
Warm-up time to 60% light	0.5 s
Power Factor (Fraction)	0.7
Voltage (Nom)	12 V

Temperature	
T-Case Maximum (Nom)	77 °C

MASTER LED spot ExpertColor AR111

Controls and Dimming	
Dimmable	Only with specific dimmers

Mechanical and Housing	
Bulb Finish	Clear
Bulb Shape	AR111
Net Weight (Piece)	0.162 kg

Approval and Application	
Energy Efficiency Class	G
Suitable For Accent Lighting	Yes
Energy Consumption kWh/1000 h	20 kWh
EPREL Registration Number	1122530
CE mark	Yes
EU RoHS compliant	Yes
EyeComfort	Yes
Flickering value (PstLM) - Flickering value as per EN 61000-3-3	1
Stroboscopic effect visibility measure (SVM)	1.5
Ambient temperature range	-20 °C to 45 °C

Application Conditions	
can it be used in closed luminaires	No
Wireless Technology	Not applicable

Product Data	
Order product name	MAS LEDExpertColor 20-100W 927 AR111 45D
Full product name	MAS LEDExpertColor 20-100W 927 AR111 45D
Full product code	871951442967300
Order code	929003478902
Material Nr. (12NC)	929003478902
Numerator - Quantity Per Pack	1
EAN/UPC - Product/Case	8719514429673
Numerator - Packs per outer box	6
EAN/UPC - Case	8719514429680

Dimensional drawing

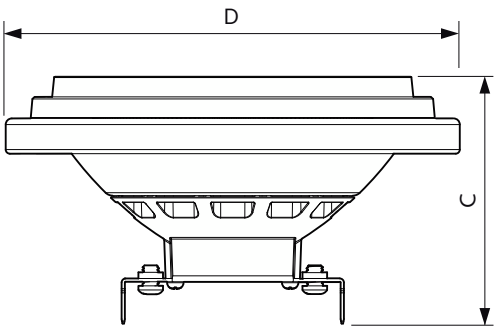

Product	D	C
MAS LEDExpertColor 20-100W 927 AR111 45D	111 mm	62 mm

Photometric data

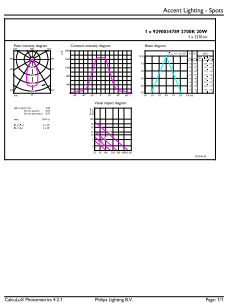

Accent Lighting Spots - MAS LEDExpertColor 20-100W 927 AR111 45D

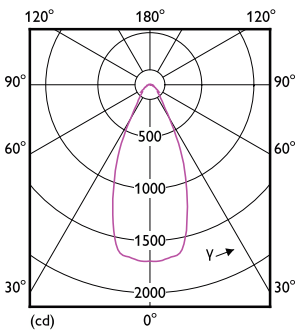

Light Distribution Diagram - MAS LEDExpertColor 20-100W 927 AR111 45D

MASTER LED spot ExpertColor AR111

Photometric data

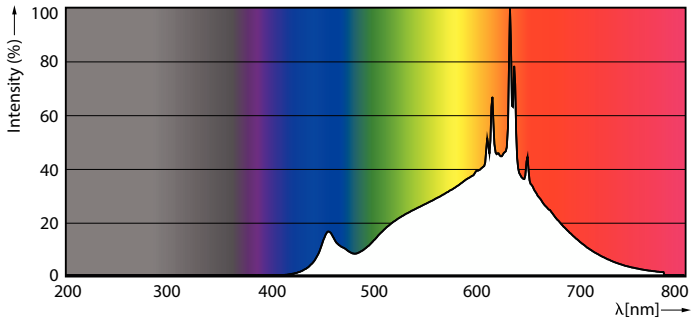

Spectral Power Distribution Colour - MAS LEDExpertColor 20-100W 927 AR111 45D

Lifetime

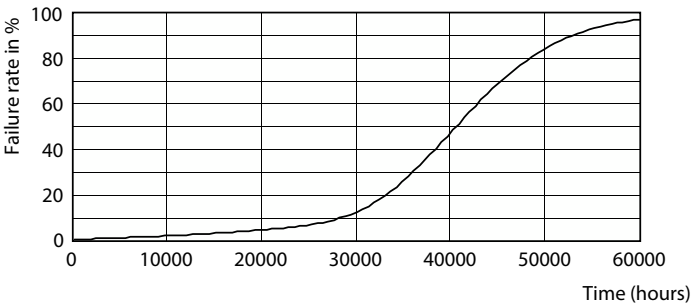

Life Expectancy Diagram

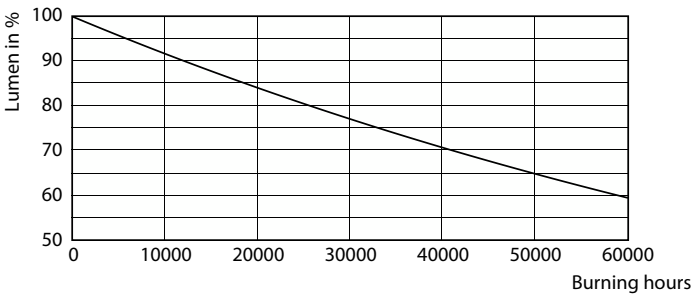

Lumen Maintenance Diagram - MAS LEDExpertColor 20-100W 927 AR111 45D

© 2026 Signify Holding All rights reserved. Signify does not give any representation or warranty as to the accuracy or completeness of the information included herein and shall not be liable for any action in reliance thereon. The information presented in this document is not intended as any commercial offer and does not form part of any quotation or contract, unless otherwise agreed by Signify. Philips and the Philips Shield Emblem are registered trademarks of Koninklijke Philips N.V.